Lab 10 – Basic Resistor Op Amp Circuits

Introduction: In this lab we will be using op amps. Our goal is to learn how to calculate and measure the voltages and currents in basic resistor operation amp circuits. It is important to note that we used 2.2k resistors instead of 2k resistors and 3k resistors instead of 3.3k resistors.

Pre-lab:

1. Find G and find Rin

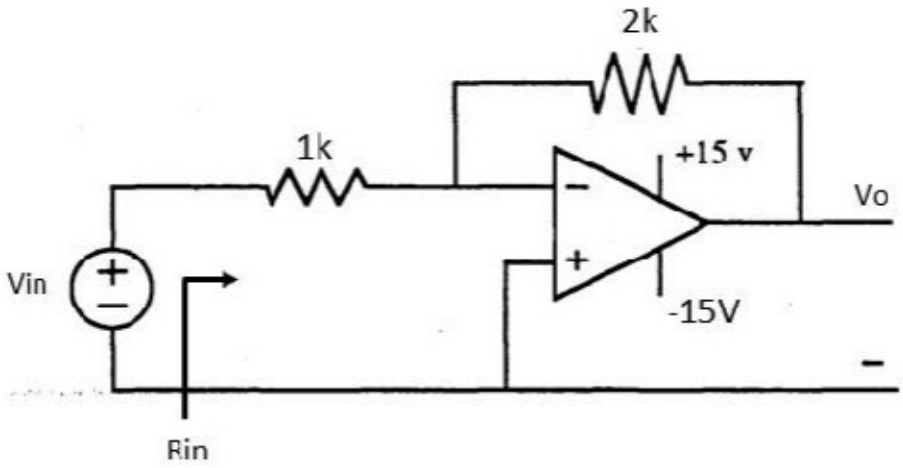

   a. G=-2
   b. Rin=2k
2. Find each circuits G and explain why the gains are different? In particular, why does the second circuit have the gain with the largest magnitude

(1)

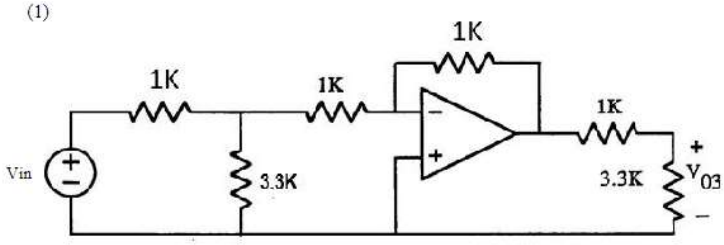

(2)

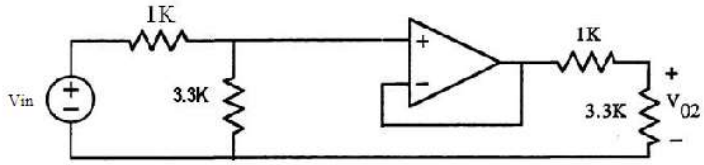

(3)

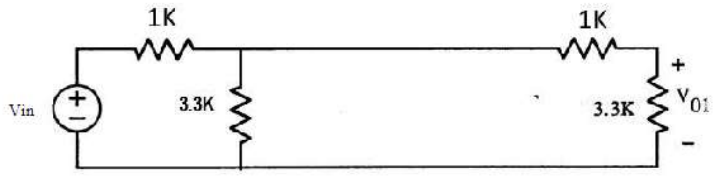

a. G=-0.33
b. G=0.58
c. G=0.5
d. The second one has the gain with largest magnitude since the op amp is connected straight to ground which makes Vp and Vn both 0.

Circuit 1

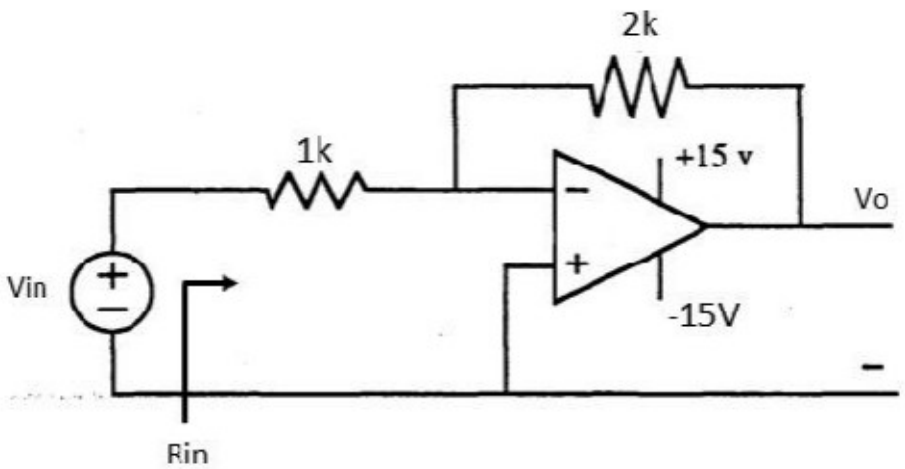

Vin	Vo	G
0.5V	1.07V	2.14
1V	2.25V	2.25
1.5V	3.38V	2.25333
2V	4.38V	2.19
2.5V	5.47V	2.188
3V	6.51V	2.17
3.5V	7.56V	2.16
4V	8.6V	2.15
4.5V	9.61V	2.13
5V	11V	2.2
5.5V	12.3V	2.236
6V	13.2V	2.2
6.5V	14.5V	2.23
7V	15.2V	2.17
7.5V	16.3V	2.173
8V	17.5V	2.19
8.5V	18.5V	2.18
9V	19.5V	2.16
9.5V	20.5V	2.16
10V	21.5V	2.15
10.5V	22.5V	2.14
11V	23.7V	2.15
11.5V	24.5V	2.13
12V	25.7V	2.14
12.5V	26.5V	2.12
13V	27.5V	2.11

b. 1k

c. Statement is true, we measured 0v across op amp

Prelab Circuits

(1)

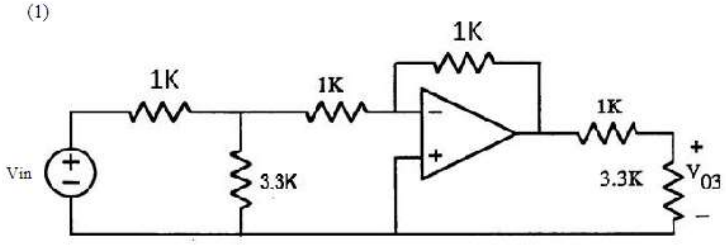

(2)

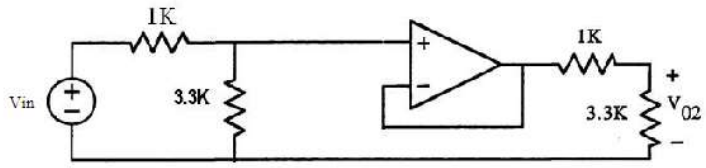

(3)

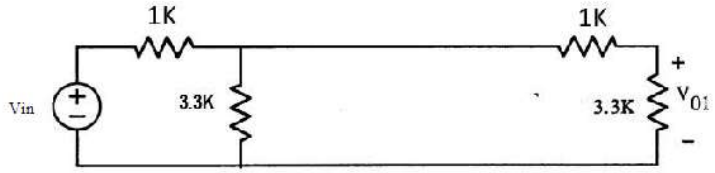

1. Vin=5V, Vo=1.7V, G=0.34

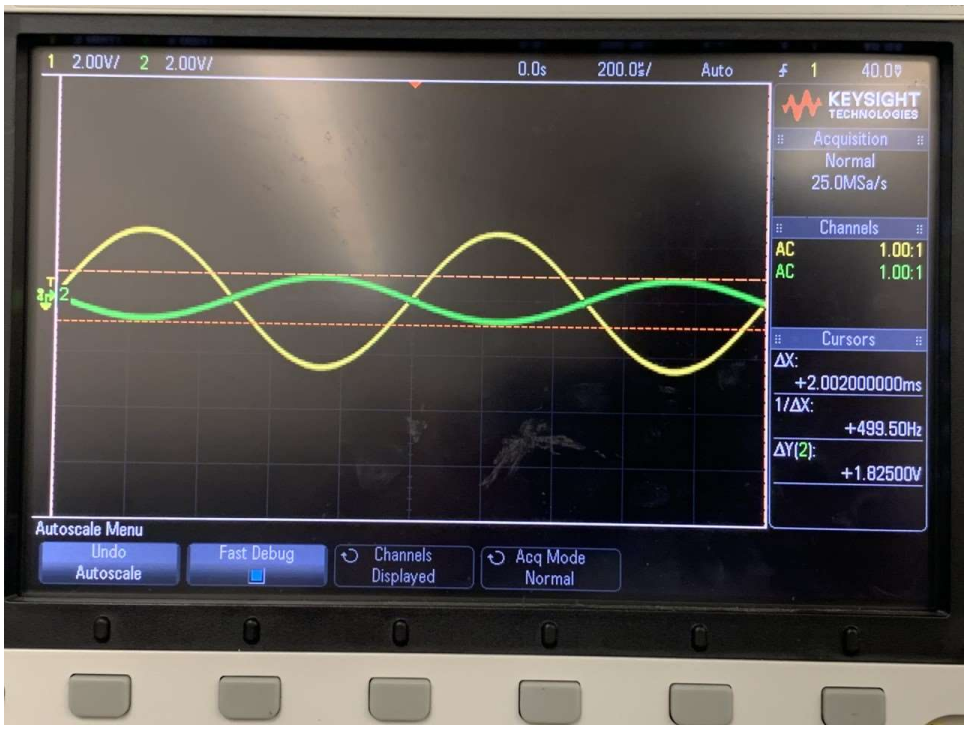

2. Vin=5V, Vo=2.8V, G=0.56

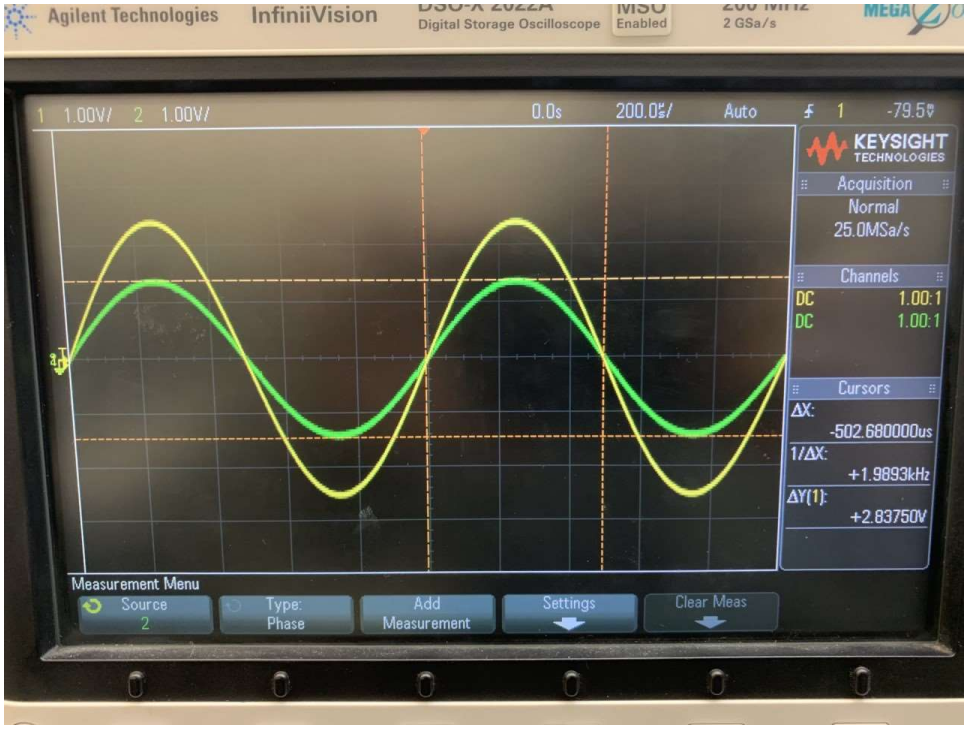

3. Vin=5v, Vo=2.3V, G=0.46

Insert picture here

Post-lab:

1. How is the overall gain of a cascade affected by the input and output resistances of the individual sections?
    a. There is no effect on input and output resistance on the overall gain
2. Find the gain G=Vo/Vin
    a. G=-1020

Conclusion: In conclusion this lab went really well. Although we had to do lots of increments of 0.5V to reach saturation, eventually we did. It was really interesting doing this lab because it was my first time using an op amp so learning the different pins and getting that experience with them was important. Overall, this lab was a success since all our data was really good.